H&S CHASSIS

4126 & 4130

OPERATOR'S MANUAL

WARNING

READ AND UNDERSTAND THIS MANUAL BEFORE OPERATING THIS EQUIPMENT. UNSAFE OPERATION OR MAINTENANCE OF THIS EQUIPMENT CAN RESULT IN SERIOUS INJURY OR DEATH.

Revision #00
CH4126 Starting Serial #021CH26001
CH4130 Starting Serial #021CH30001

HSMFG0520 Part #85886

Manufactured By

H&S MANUFACTURING CO.,INC.

MARSHFIELD, WISCONSIN 54449

(715) 387-3414 FAX (715) 384-5463

CONTENTS

Warranty 1
Manufacturers Statement 2
Warranty Registration Form 3
Dealer Pre-Delivery Checklist 5
Dealer Delivery Checklist 7
Safety Information - Be Alert Symbol 9
Safety Information - Explanation of Safety Signs 10
Safety Instructions. 11
Mount Attachments Safely 12
Safety Decals 13
Warning - Owner Must Read and Understand. 14
Bolt Torque Chart. 15
Set-Up & Assembly. 16
Transporting. 17
Operation 18
Adjustment. 19
Service. 20
Lubrication Guide. 21
ADR Axle Information. 22-50
Options. 51
Decal Location 52-53
Service Notes 54

H&S WARRANTY

H&S Manufacturing Co., Inc. ("H&S") warrants this product to be free from defect in material and workmanship. Except as noted below, this warranty term is twelve (12) months on labor, and twenty-four (24) months on parts from the date of delivery of the product to the original purchaser by an authorized H&S dealer. Under this warranty, H&S will repair or replace, at its option, any covered part which is found to be defective in material or workmanship during the applicable warranty term. In no case will the covered repair cost of a part or parts exceed the replacement cost of that part. Warranty service must be performed by H&S or a dealer authorized by H&S to sell and/or service the product involved, which will use only new or remanufactured parts or components furnished by H&S. This warranty includes approved parts and labor to fix the product but does not include, and the purchaser is responsible for, any service call and/or transportation of the product to and from the dealer's place of business, for any premium charged for overtime labor requested by the purchaser, and for any service work not directly related to any defect covered under this warranty. This warranty includes only those components of the product manufactured by H&S. Warranty for any component not manufactured by H&S including, but not limited to, engines, batteries, tires, rims, hydraulic motors, pumps, etc. are covered by the warranty, if any, provided separately by their respective manufacturers.

This warranty in all its parts, is extended solely to the original purchaser of the product, is terminated upon any subsequent transfer or sale from or by the original purchaser and extends no third party benefits or rights whatsoever.

The warranty term for any product used in any commercial, custom, for hire or rental application, is limited to six (6) months from the date of delivery of the product to the original purchaser or the first day of service, whichever comes first, by an authorized H&S dealer.

For commercial, custom for hire, or rental application, warranty is limited to 6 months from the date of delivery to the original purchaser, or the first day in service, whichever is earlier.

This warranty does not include: (1) Any product that has been altered or modified in ways not approved by H&S; (2) Depreciation or damage caused by normal wear, use for which the product was not designed, misuse, improper or insufficient maintenance, improper operation, accident or failure to follow the product Operator's Manual recommendations and product decal recommendations; (3) Normal maintenance parts and service; (4) Repairs made with parts other than those available from H&S or performed by anyone other than H&S or a dealer authorized by H&S to sell and/or service the product involved.

To secure warranty service the purchaser must report the product defect to a dealer authorized by H&S to sell and/or service the product involved within the applicable warranty term together with evidence of the warranty start date and make the product available to that dealer within a reasonable period of time.

THERE ARE NO WARRANTIES WHICH EXTEND BEYOND THE DESCRIPTION ON THE FACE OF THIS WARRANTY. H&S and the companies affiliated with it makes no warranties, representations, or promises, express or implied, as to the performance or freedom from defect of its products other than those set forth above and **NO IMPLIED WARRANTY OF MERCHANTABILITY, FITNESS OR FITNESS FOR A PARTICULAR PURPOSE IS MADE. IN NO EVENT WILL THE DEALER, H&S OR ANY COMPANY AFFILIATED WITH H&S BE LIABLE FOR INCIDENTAL OR CONSEQUENTIAL DAMAGES.** The **ONLY REMEDY** the purchaser has in connection with the breach of performance of any warranty on H&S products are those set forth above.

The selling dealer has no authority to make any representation or promise on behalf of H&S, or to modify the terms or limitations of this warranty in any way.

11/14/18

MANUFACTURER'S STATEMENT

Your New H&S Product has been manufactured of the finest quality materials and components. The performance you get from your machine is largely dependent upon how well you read and understand this manual and apply this knowledge. There is a right and a wrong way to do everything. Please do not assume that you know how to operate and maintain your Machine before reading this manual carefully. Keep this manual available for ready reference.

WARRANTY REGISTRATION

(Remove Copy At Perforation)

- **Date of Purchase:** _____
- **Purchaser Name:** _____
- **Street Address:** _____
- **City:** _____
- **State:** _____ **Zip:** _____
- **Phone Number:** _____

  E-mail Address: _____
- **Product:** _____
- **Model Number:** _____
- **Serial Number:** _____
- **You have received the Operators Manual for this product. Yes _____ No _____**

Interested in receiving the H&S Newsletter? Yes _____ No _____

- **Dealer Name:** _____
- **Street Address:** _____
- **City:** _____
- **State:** _____ **Zip:** _____
- **Signature:** _____
- ***All fields must be filled out to insure prompt notification of product and/or warranty updates.***

Please mail the completed WARRANTY REGISTRATION FORM to:
H&S Manufacturing Co., Inc.
2608 S. Hume Ave.
Marshfield, WI 54449

Intentionally Left Blank

H&S DEALER PRE-DELIVERY CHECK LIST

AFTER COMPLETION, DEALER SHOULD REMOVE AND RETAIN FOR RECORDS

After the Chassis has been completely set-up, check to be certain it is in correct operating order before delivering to the customer. The following is a list of points to inspect. Check off each item as you have made the proper adjustments and found the item operating satisfactorily.

- ☐ Chassis was not damaged in shipment. Check for dents and loose or missing parts. Report damage immediately to H&S Manufacturing Co., Inc.
- ☐ Chassis has been correctly assembled according to instructions in this manual.
- ☐ Torque the wheel bolts to the specifications listed in the ADR Axle Section of this manual.
- ☐ Tires are equally inflated to proper pressure.
- ☐ All bolts and fasteners are tight.
- ☐ All components are operating trouble free.
- ☐ All grease fittings have been lubricated and wheel bearings properly packed and adjusted. (See lubrication guide in this manual).
- ☐ Hoses and fittings are properly attached and there are no visible leaks. (Brakes)
- ☐ All decals are in place and legible.

(Remove Dealers File Copy At Perforation)

Model Number _____

Serial Number _____

Dealer Name _____

Inspection Date _____

Signature of Pre-Delivery Inspector _____

Intentionally Left Blank

DEALER DELIVERY CHECK LIST

AFTER COMPLETION, DEALER SHOULD REMOVE AND RETAIN FOR RECORDS

This check list that follows is an important reminder of valuable information that should be passed on to the customer at the time this Chassis is delivered.

Check off each item as you explain it to the customer.

This delivery check list, when properly filled out and signed assures the customer that the Pre-delivery service was satisfactorily performed.

- ☐ Explain to the customer that the pre-delivery inspection was made.
- ☐ Explain to the customer all the safety precautions they must excercise when operating this unit.
- ☐ Explain recommended loads for different types of materials.
- ☐ Explain to customer that regular lubrication is required for proper operation and long life of machine.
- ☐ Show customer the lubrication section of Owner's Manual.
- ☐ Give the customer Operator's Manual and make sure they read and understand all operating and service instructions.
- ☐ Have customer sign a completed "Warranty Registration," and mail it promptly.

Date Delivered _____

Dealer's Name _____

By _____

Signature of Original Buyer _____

Note: Warranty is not valid until warranty card is completed and returned to H&S Mfg. Co., Inc.

Intentionally Left Blank

SAFETY INFORMATION

BE ALERT!

YOUR SAFETY IS INVOLVED.

THIS SYMBOL IS USED THROUGHOUT THIS BOOK WHENEVER YOUR PERSONAL SAFETY IS INVOLVED. TAKE TIME TO BE CAREFUL. REMEMBER: THE CAREFUL OPERATOR IS THE BEST OPERATOR. MOST ACCIDENTS ARE CAUSED BY HUMAN ERROR. CERTAIN PRECAUTIONS MUST BE OBSERVED TO PREVENT THE POSSIBILITY OF INJURY OR DAMAGE.

H&S MANUFACTURING CO., INC.

SAFETY INFORMATION

Keep signs in good condition. Immediately replace any missing or damaged signs.

RECOGNIZE SAFETY INFORMATION

This is the safety-alert symbol. When you see this symbol on your machine or in this manual, be alert to the potential for personal injury.

Follow recommended precautions and safe operating practices.

UNDERSTAND SIGNAL WORDS

A single word; DANGER, WARNING, or CAUTION is used with the safety-alert symbol. DANGER identifies the most serious hazards.

Safety signs with signal word DANGER or WARNING are typically near specific hazards.

General precautions are listed on CAUTION safety signs.

FOLLOW SAFETY INSTRUCTIONS

Carefully read all safety messages in this manual, and all safety signs on your machine. Follow all recommended precautions and safe operating procedures.

OBSERVE MAXIMUM TRANSPORT SPEED

The maximum transport speed for this implement is 32 km/h (20 m.p.h.).

Some tractors are capable of operating at speeds that exceed the maximum transport speed of this implement. Regardless of the maximum speed capability of the tractor being used to tow this implement, do not exceed the implement's maximum transport speed.

Exceeding the implements maximum transport speed can result in:

* Loss of control of the tractor/implement combination
* Reduced or no ability to stop during braking
* Implement tire failure
* Damage to the implement structure or its components

Use additional caution and reduce speed when towing under adverse surface conditions, when turning, and when on inclines.

Do not attempt transport if the fully loaded implement weighs more than 1.5 times the weight of the tractor.

FOLLOW SAFETY INSTRUCTIONS

Carefully read all safety messages in this manual and all safety signs on the machine. Follow recommended safety precautions and safety operating practices.

Keep safety signs in good condition. Replace missing or damaged safety signs.

RUN-AWAY / BREAK AWAY

WARNING: TO PREVENT SERIOUS INJURY OR DEATH

Shift to lower gear before going down steep grades.

Keep towing vehicle in gear at all times.

Never exceed safe travel speed.

Always use safety pin with locking device and safety chain when attaching towing vehicle.

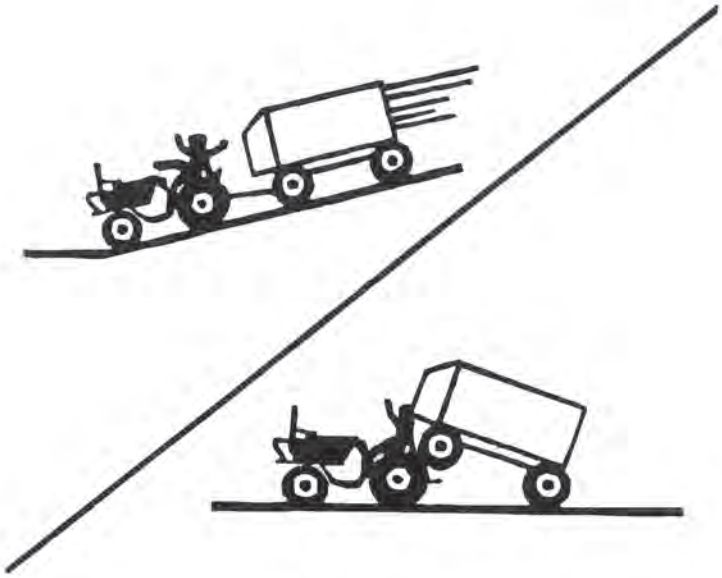

LOAD WAGON SAFELY

WARNING: Help prevent chassis and tractor rollover due to uneven load distribution. Distribute load evenly between front and rear, and side to side.

Distribute load evenly. Poor distribution can cause improper trailing of chassis.

MOUNT ATTACHMENTS SAFELY

CAUTION: When mounting equipment to the chassis, refer to the manufacturer's mounting recommendations for that particular equipment.

WARNING: Help prevent serious injury of death resulting from tractor or chassis rollover. Travel uphill or downhill when working on inclines or slopes, avoid traveling across the grade.

BE AWARE OF LOW WIRES

Be aware of load height and height of electrical wires in the area.

MAINTAIN SAFE CLEARANCE FROM ELECTRIC POWER LINES AND AVOID CONTACT WITH ANY ELECTRICALLY CHARGED CONDUCTOR

CONTACT WITH ELECTRIC POWER SOURCES CAN RESULT IN ELECTRICAL SHOCK OR ELECTROCUTION

FAILURE TO HEED THIS WARNING MAY RESULT IN SERIOUS INJURY OR DEATH

SAFETY INFORMATION

WARNING

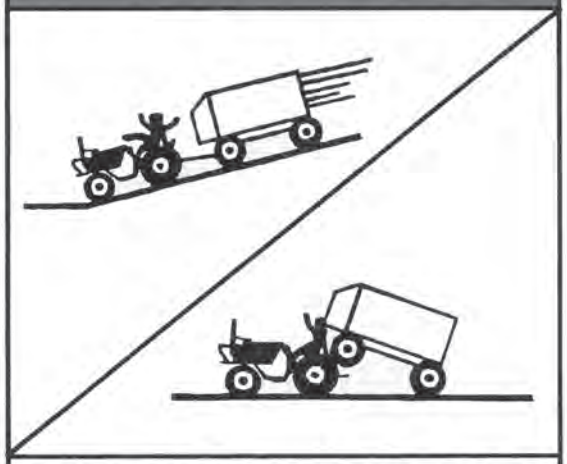

RUN-AWAY/BREAK-AWAY HAZARD

TO PREVENT SERIOUS INJURY OR DEATH:

SHIFT TO LOWER GEAR BEFORE GOING DOWN STEEP GRADES.

KEEP TOWING VEHICLE IN GEAR AT ALL TIMES.

NEVER EXCEED A SAFE TRAVEL SPEED.

ALWAYS USE SAFETY PIN WITH LOCKING DEVICE AND SAFETY CHAIN WHEN ATTACHING TOWING VEHICLE.

1495A

WARNING

HELP AVOID INJURY

- READ & UNDERSTAND THE OPERATORS MANUAL PROVIDED WITH THIS MACHINE. IF MISPLACED CALL H & S MANUFACTURING AT **715-387-3414** WITH MODEL AND SERIAL NUMBER.
- UNDERSTAND ALL SAFETY WARNINGS AND FUNCTION OF CONTROLS.
- KEEP SAFETY DEVICES IN PLACE AND WORKING.
- KEEP YOURSELF AND OTHERS WELL CLEAR OF MOVING PARTS.
- DISCONNECT ALL POWER BEFORE SERVICING OR CLEANING THIS MACHINE.
- DO NOT EXCEED 20 MPH

72203A

WARNING

CRUSHING HAZARD

TO PREVENT SERIOUS INJURY OR DEATH:

KEEP HANDS AND BODY OUT OF HITCH AREA WHEN ATTACHING TOWING VEHICLE.

KEEP BODY CLEAR OF CRUSH POINT BETWEEN TOWING VEHICLE AND LOAD.

KEEP FEET AND LEGS CLEAR FROM UNDER TONGUE AREA IN CASE OF POSSIBLE JACK FAILURE.

82602

WARNING

TO PREVENT SERIOUS INJURY OR DEATH:

READ AND UNDERSTAND OWNER MANUAL BEFORE USING. REVIEW SAFETY PRECAUTIONS ANNUALLY.

DO NOT EXCEED 10 MPH WHEN GROSS TOWED LOAD WEIGHS MORE THAN THE TOWING VEHICLE. IF GROSS TOWED LOAD WEIGHS LESS THAN THE TOWING VEHICLE, MAXIMUM TOWING SPEED IS 20 MPH.

DO NOT TOW WAGONS IN TANDEM ON PUBLIC ROADS.

DO NOT OPERATE ON PUBLIC ROADS UNLESS PROPER LIGHTS AND REFLECTORS ARE INSTALLED AND WORKING.

DO NOT USE THIS RUNNING GEAR TO HAUL ANHYDROUS AMMONIA OR OTHER PRESSURIZED TANKS.

DO NOT ALLOW RIDERS ON MACHINE.

DO NOT OVERLOAD.

DO NOT EXCEED RATED CAPACITY OF WHEEL AND TIRE COMBINATION USED.

MAINTAIN WHEEL BOLTS AT TORQUE RECOMMENDED IN OPERATOR MANUAL.

BEFORE MAINTENANCE OR REPAIR STOP TOWING VEHICLE, SET PARKING BRAKE, AND REMOVE IGNITION KEY.

PLACE SAFETY STANDS UNDER FRAME AND CHOCK WHEELS BEFORE WORKING ON TIRES OR RUNNING GEAR.

IF EQUIPPED WITH BRAKES, MAINTAIN PROPER ADJUSTMENT.

91604

TRACTOR;
This operators manual uses the term “Tractor” when identifying the the power source.

WARNING

TO PREVENT SERIOUS INJURY OR DEATH

BEFORE YOU ATTEMPT TO OPERATE THIS EQUIPMENT, READ AND STUDY THE FOLLOWING INFORMATION. IN ADDITION, MAKE SURE THAT EVERY INDIVIDUAL WHO OPERATES OR WORKS WITH THIS EQUIPMENT, WHETHER FAMILY MEMBER OR EMPLOYEE, IS FAMILIAR WITH THESE SAFETY PRECAUTIONS.

Stop the tractor engine, remove ignition key, and allow all mechanisms to stop before cleaning, working, or adjusting on machine.

DO NOT ALLOW PERSONNEL OTHER THAN THE QUALIFIED OPERATOR NEAR THE MACHINE.

DO NOT allow riders on machine at any time.

ALWAYS use a safety pin with locking device.

DO NOT step up on machine at any time.

NEVER exceed safe travel speed.

DO NOT allow minors to operate or be near the machine.

STAY CLEAR of hydraulic lines, they may be under extreme pressure or heat.

Loose or floppy clothing should not be worn by the operator.

H&S Mfg. Co. always takes the operator and his safety into consideration and guards exposed moving parts for their protection. However, some areas cannot be guarded or shielded in order to assure proper operation. In addition, the Operators Manual and decals on the machine itself warn you of further danger and should be read and observed closely.

Study The Above Safety Rules

ATTENTION - BE ALERT - YOUR SAFETY IS INVOLVED

CAP SCREW TORQUE VALUES

The specifications below are the torque values for fasteners as it adheres to the SAE torque value standards. All fasteners should be torqued to the proper values found in the figures below unless otherwise specified by the engineering drawing.

Lubed torque would be any fastener that has grease, liquid Loctite, oil, etc. on the threads.
Dry torque would be any fastener which has threads that are clean and dry and do not have any liquid Loctite or grease on them.

Hex Head Fasteners

The figure shown below shows how to determine what grade a fastener is.

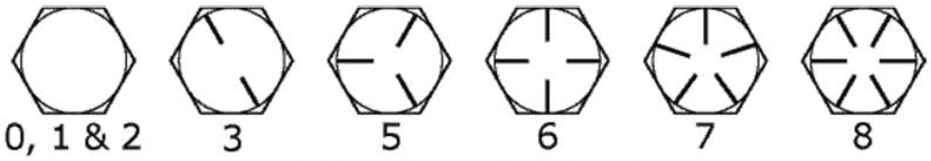

SAE grades on bolt heads

SUGGESTED ASSEMBLY TORQUE VALUES							WORKING TORGUE			
	SAE GRADE 2 -6"		SAE GRADE 5		SAE GRADE 8		18-8 SS	316 SS	BRASS	SILICON BRONZE
Diam & Thrds Per Inch	Dry FT. LB.	LUB FT. LB.	Dry FT. LB.	LUB FT. LB.	Dry FT.LB.	LUB FT. LB.	IN LBS	IN LBS	IN LBS	IN LBS
1/4-20	5.5	4.2	8	6.3	12	9	75.2	78.8	61.5	68.6
1/4-28	6.3	4.7	10	7.2	14	10	94.0	99.0	77.0	87.0
5/16-18	11	8	17	13	24	18	132	138	107	123
5/16-24	12	9	19	14	27	20	142	147	116	131
3/8-16	20	15	30	23	45	35	236	247	192	219
3/8-24	23	17	35	25	50	35	259	271	212	240
7/16-14	32	24	50	35	70	50	376	393	317	349
7/16-20	36	27	55	40	80	60	400	418	327	371
1/2-13	50	35	75	55	110	80	517	542	422	480
1/2-20	55	40	85	65	120	90	541	565	443	502
9/16-12	70	55	110	80	150	110	682	713	558	632
9/16-18	80	60	120	90	170	130	752	787	615	697
5/8-11	100	75	150	110	210	160	1110	1160	907	1030
5/8-18	110	85	170	130	240	180	1244	1301	1016	1154
3/4-10	175	130	260	200	380	280	1530	1582	1249	1416
3/4-16	200	140	300	220	420	310	1490	1558	1220	1382
7/8-9	170	125	430	320	600	450	2328	2430	1905	2140
7/8-14	180	140	470	350	670	500	2318	2420	1895	2130
1-8	250	190	640	480	910	680	3440	3595	2815	3185
1-14	280	210	720	540	1020	760	3110	3250	2545	2885

SET-UP & ASSEMBLY

NOTE: Determine right or left side of the Chassis by viewing it from the rear. If instructions or parts lists call for hardened bolts, refer to bolt torque chart.

1. Check the Chassis for proper assembly and adjustment.
2. Make sure that all bolts are tightened.
3. Lubricate the Chassis completely. (See Lubrication Chapter in this manual).
4. Check the tires for proper air pressure. Refer to the manufacturers recommended PSI rating.
5. Torque the wheel bolts to the specifications listed in the ADR Axle Section of this manual.
   Check periodically thereafter.

TIRE INFLATION

Inflate tires to manufacture's recommended pressure, making sure all tires have equal pressure. Inadequate or unequal tire pressure can cause improper trailing and premature tire failure.

TIRE SIZE	PRESSURE
600/50x22.5	38 @ 25 mph
700/50x22.5	41 @ 25 mph
710/45Rx22.5	58 @ 25 mph

TRANSPORTING

TOWING ON HIGHWAY

Follow state and local regulations when towing farm equipment on public highways. Never tow the chassis on a public highway at a speed greater than 20 mph (32 kph).

SAFETY CHAIN

To prevent break-away, always use a safety chain when attaching to the towing vehicle.The safety chain shall have a minimum tensile strength equal to, or greater than the ultimate gross weight of the towed machine. It must be replaced if one or more links are broken, stretched or otherwise damaged.

OPERATION

GENERAL INFORMATION

After receiving your chassis, check entire unit carefully before first operation.

Tighten bolts and set screws that might have come loose.

Torque the wheel bolts to the specifications listed in the ADR Axle Section of this manual.

Lubricate as explained in the ADR Axle Section of this manual.

TIRE INFLATION

Inflate tires to manufacture's recommended pressure, making sure all tires have equal pressure. Inadequate or unequal tire pressure can cause improper trailing and premature tire failure.

TIRE SIZE	PRESSURE
600/50x22.5	38 @ 25 mph
700/50x22.5	41 @ 25 mph
710/45Rx22.5	58 @ 25 mph

ADJUSTMENTS

WHEEL BEARINGS

IF WHEEL BEARINGS BECOME LOOSE, ADJUST THEM IMMEDIATELY.

1. Block the wheels to prevent rolling and jack up chassis until the wheels turn freely.
2. Adjust them to the specifications listed in the ADR Axle Section of this manual.
3. Wheel Bearing maintenance must follow the maintenance listed in the ADR Axle Section of this manual.

SERVICE

Your H&S Chassis has been designed and manufactured to provide years of trouble free service. You the operator, can help by performing the following:

FREQUENTLY:

* Check wheel bearings, making sure of proper adjustment. See the ADR Axle Section of this manual.

* Check lug nuts. Torque the wheel bolts to the specifications listed in the ADR Axle Section of this manual.

* Check tire pressure. Make sure all tires are inflated equally to proper pressure.

* Lubricate all points identified in this manual.

SEASONALLY:

***** Check all tires for wear.

***** Check all pivot points and bushings for wear.

NOTES:

*** Refer to the ADR Section of this manual for all service related items.**

*** For further service information or questions, contact an authorized H&S Dealer.**

LUBRICATION

Become familiar with all lubrication points and establish a routine to ensure complete lubrication of the Chassis.

GENERAL INFORMATION

If lubricated properly and often enough, it will prolong the life of your Industrial Chassis. Grease daily during normal use and **before and after storage and after power washing.** Use a good grade of Lithium-base grease. Wipe off excessive grease to prevent accumulation of chaff or grit around bearing.

*** Refer to the ADR Axle Section of this manual for any axle/suspension lubrication points.**

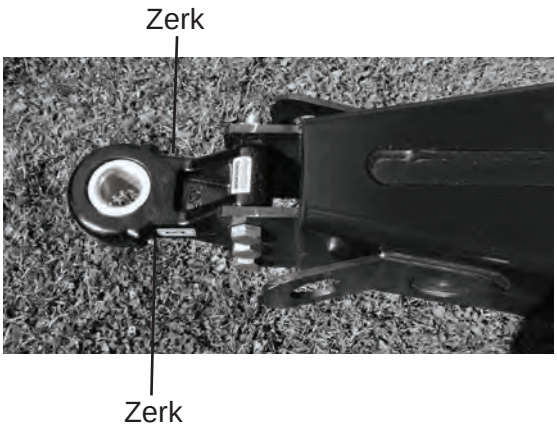

IMPORTANT: *Catch and dispose of fluid per local waste disposal regulations whenever service is performed on hydraulic components, valves, cylinders, hoses, etc.*

MAINTENANCE MANUAL

ADR SYSTEM GROUP

I Manufacturer's official language Version

Edition: 08/2015
Revision level: 00
Document code:

1 Important information

1.1 General information

This manual contains the main maintenance information applicable to ADR - Colaert axles, ADR - Colaert mechanical type suspensions and ADR - Colaert hydraulic suspensions.
The maintenance intervals indicated in the maintenance instructions must be followed to keep the vehicle in safe conditions and in full efficiency for road circulation.

This manual should be kept with care.

In the event damages makes the copy of this manual in your possession unusable, the user can request a copy from customer service, specifying the type of product and serial number indicated on the product identification plate. Please contact customer service for information on updates ADR - Colaert has made to its products. In any event, the latest version of this maintenance manual can be found in the *download* section on site www.adraxles.com.

ADR SPA
Customer service
Tel: +39 02 9617 11
Fax: +39 02 9617 1420
E-mail: customercare@adraxles.com

ADR - Colaert cannot be held liable for damages caused by:

- improper product use;
- use by unqualified and/or unskilled personnel;
- incorrect installation (if by the customer);
- inadequate product maintenance or cleaning;
- unauthorised alterations or work;
- incorrect manoeuvres;
- use of non original spare parts;
- use of unforeseen accessories or not authorised in writing;
- full or partial failure to follow the instructions;
- exceptional events.

1.2 Warranty conditions

As a memorandum for the user, ADR - Colaert guarantees the technical specifications, part quality and good supplied product operations according to the stated parameters.
The manufacturer's warranty does not cover all parts whose repair or replacement is due to natural part wear or defects due to incorrect product use by the customer such as, for example but not limited to:

- unauthorised alterations;
- use other than that indicated by ADR - Colaert;
- product overloads beyond that indicated by ADR - Colaert;
- negligent or poor product part maintenance;
- work on products inconsistent with ADR - Colaert instructions;
- failure to replace parts subject to wear, etc.

Please remember than every alteration to the vehicle voids original approval and requires new approval or forfeit the vehicle registration card until standardised.

In the event product defects are found, the customer must communicate them in writing.

This manual was originally drafted in Italian and it is the only official language for which the manufacturer is liable in the event of translation inconsistencies.

1.3 Symbols and terms used in the manual

	Warning Indicates instructions that only if correctly followed avoid **personal hazard situations**, provides information on **hazards and how to avoid them**, suggests performance procedures.
	Attention to tightening torque Indicates the tightening torque values to be applied to certain products to avoid **personal hazard situations**, **potential inefficiencies and product break downs**.
	Wrench Indicates ordinary and scheduled maintenance procedures to be performed in safe conditions. These must be performed by an authorised individual trained for this purpose.
	Lubricant grease Indicates ordinary and scheduled greasing procedures (lubrication with grease) to be performed in safe conditions. These must be performed by an authorised individual trained for this purpose.
	ADR - Colaert customer service Indicates the need to contact ADR - Colaert customer service. In the event of particularly important part maintenance to guarantee normal product operations, contact **ADR - Colaert** to set a service appointment on the customer's premises.

1.4 Suggestions for your safety

Vehicle repairs and maintenance may expose operators to unforeseen problems. This warning only illustrates some potential hazards and its purpose is to make users aware of risks that may occur and guide them towards reasonable behaviour to promote safety.
ADR - COLAERT recommends having maintenance performed by specialised departments.

Important: Never overload your car. The chassis, axles and breaks may suffer damages.

Never exceed the total vehicle weight admitted by the manufacturer, nor the maximum speed set by circulation rules. Your vehicle will thus operate in maximum safety, will always brake efficiently and reliably even on long descents. Tyre wear will be even and driving stability with many curves will always be ensured.
Place the load to evenly distribute the load on all wheels as much as possible. This achieves higher and safer driving performance, longer lasting tyres and the tractor will save fuel.
Only use tyres of the type and size indicated by the vehicle manufacturer according to axle design requirements. The use of wheels with disc offset must be authorised by the manufacturer. Constantly check braking system efficiency, periodically checking brake gasket wear, lever regulation and control cylinder conditions.

Personal protection: Wear all the equipment and protections necessary: goggles, masks, gloves, helmets, safety shoes, protective clothing, etc.; Work in pairs of two.

Unstable vehicles: Never work under or near a vehicle that was only lifted by a jack.
When working under or near a lifted vehicle, always make sure the jack used is associated with supports or suitable blocks and that the material used is suited to the lifted load. Make sure the group is perfectly stable and that it will remain so during and after the forces applied to the material during maintenance. Also ensure ground stability.

Hot parts: Be careful of parts that may become very hot during use such as, for example, brake drums.

Pressurized, hydraulic or pneumatic circuit: before working on the hydraulic or pneumatic circuit, oil and air may be pressurized, take all the necessary precautions to avoid accidental jets.

Risks due to fires, tied to smoke, toxic gas and irritant substances: All fuels are highly flammable and mix vapours explosive. To clean or degrease parts, only use retail products suited for this purpose and follow the instructions on the packaging. Never put these products into contact with skin and never inhale vapours, smoke or gas.
WARNING: Smoking, the use of flames, producing sparks, etc. causes **explosion or fire hazards** due to vapours, fuels, oils, paints, solvents, dust, straw, etc.; keep an extinguisher at hand at the work site to meet these risks.

Asbestos: Our axle brake gaskets no longer contain asbestos and this long before European community provisions banned its use. In the event of doubt on asbestos (working on old material for example), handle parts as if they contained it, asbestos dust is extremely hazardous to health.

Ecology: Much care and focus was placed on the analysis of the negative effects of our products' impact on the environment. Similarly, do not discard oil, grease and used products in the environment, respect nature and the rules. Discard them at a collection point, dump or recycling area. In order to receive the address of your nearest point, contact your local environmental service agency.

1.5 Product identification data

Product identification data is indicated on a specific **identification plate**, affixed and riveted to the product. Each **identification plate,** for both axle and suspension identification, indicates the items illustrated below.

1.5.1 Axle identification plate

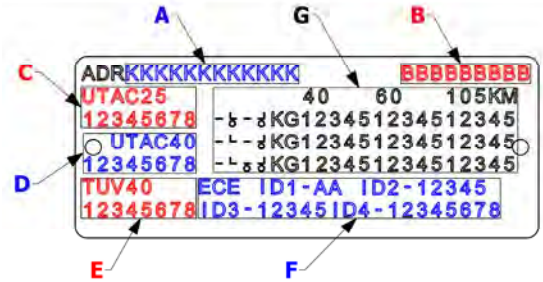

1.5.2 Suspension identification plate

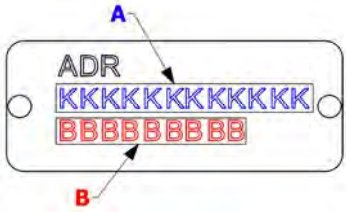

1.5.3 Product identification plate reading

The **axle identification plate** can be read as follows:

- **A** : axle identification code, the code is made up of 12 alphanumeric characters;
- **B** : order identification code, the code is made up of 9 alphanumeric characters;
- **C** : UTAC approval report identification code at 25 km/h, the code is made up of 8 characters;
- **D** : UTAC approval report identification code at 40 km/h, the code is made up of 8 characters;
- **C** : StVZO approval report identification code at 40 km/h, the code is made up of 8 characters;
- **F** : ECE-R13 approval identification data;
- **G** : maximum axle capacity data referred to the application and speed.

If your product is an **ADR - COLAERT suspension**, the identification plate can be read as follows:

- **A** : axle identification code, the code is made up of 12 alphanumeric characters;
- **B** : order identification code, the code is made up of 9 alphanumeric characters;

Data on identification plates are indelible or silk screened.

N.B. the data on the plate cannot be ALTERED for any reason.

1.6 Summary of the main international farm vehicle tyre mounting diagrams.

1.6.1 Mount with centring on columns

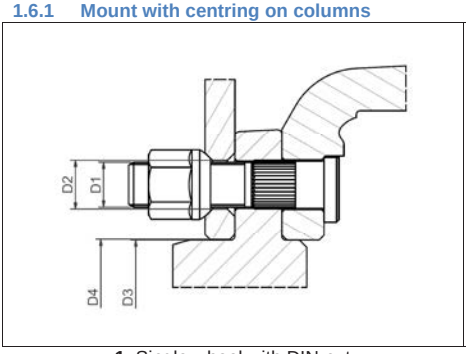

1. Single wheel with DIN nut

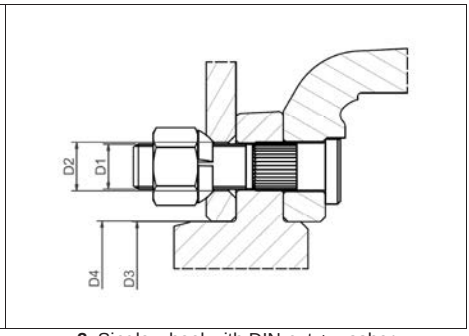

2. Single wheel with DIN nut + washer

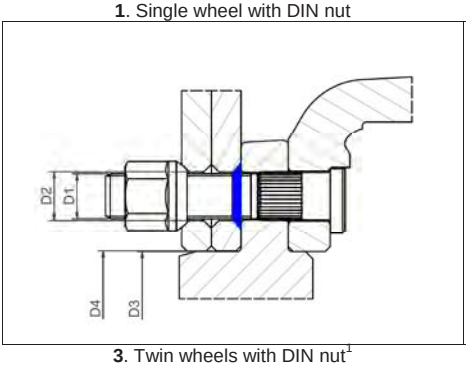

3. Twin wheels with DIN nut[1]

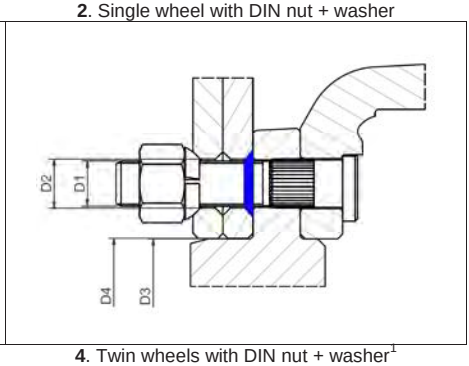

4. Twin wheels with DIN nut + washer[1]

Fitting	column	wrench	wheel hole	hub centre	wheel centre	Illustration
	D1 (mm)	mm	D2 (mm)	D3 (mm)	D4 (mm)	
4 x Ø 95	M 12 x 1,5	17	16	62	63	1
5 x Ø 140	M 14 x 1,5	19	18.5	93	94	1
6 x Ø 205	M 18 x 1,5	24	21.5	160	161	1 - 3
8 x Ø 275	M 18 x 1,5	24	21.5	220	221	1 - 3
8 x Ø 275	M 18 x 1,5	27	21.5	220	221	2 - 3 - 4
8 x Ø 275	M 20 x 1,5	30	27	220	221	3 - 4
10 x Ø 335	M 22 x 1,5	30	27	280	281	3 - 4

[1] **When mounting, always remember to insert the conic centring washer on the column (indicated in blue in the illustration) before the internal wheel, as illustrated.**

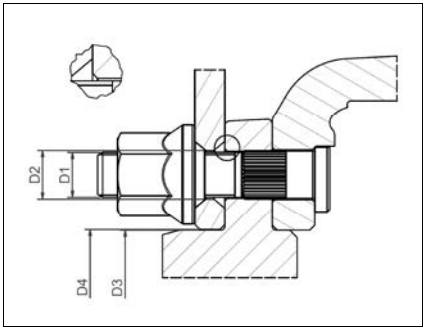

5. Single wheel with conic nut

Fitting	column	wrench	wheel hole	hub centre	wheel centre	Illustration
	D1 (mm)	mm	D2 (mm)	D3 (mm)	D4 (mm)	
8 x Ø 275	M 18 x 1,5	29	21.5	220	221	5
10 x Ø 335	M 22 x 1,5	32	27	280	281	5

1.6.2 Mount with centring on hub

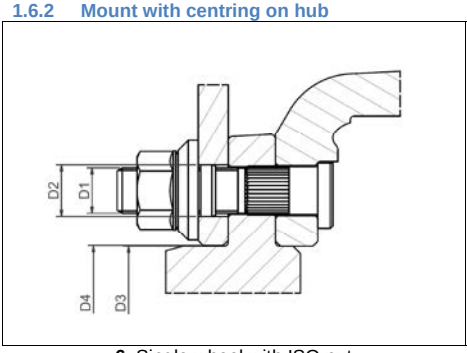

6. Single wheel with ISO nut

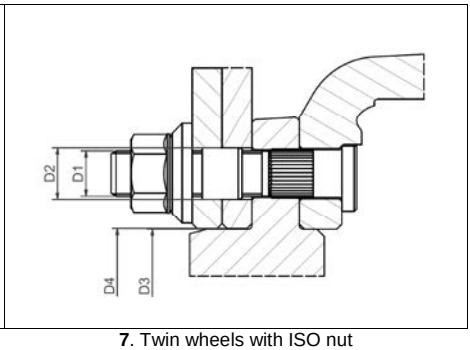

7. Twin wheels with ISO nut

Fitting	column	wrench	wheel hole	hub centre	wheel centre	Illustration
	D1 (mm)	mm	D2 (mm)	D3 (mm)	D4 (mm)	
8 x Ø 275	M 20 x 1,5	28	27	220.5	211	6 - 7
10 x Ø 225	M 22 x 1,5	32	27	175.5	176	6 - 7
10 x Ø 335	M 22 x 1,5	32	27	280.5	281	6 - 7
10 x Ø 335	M 24 x 1,5	36	27	280.5	281	6 - 7

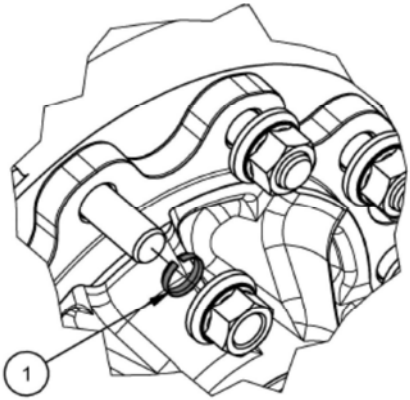

Wheel mounting with centring on hub can be facilitated by the introduction, at least in two columns, of the indicated centring rings, reference 1 in the illustration. This is useful especially when mounting twin wheels since the disc offset could make hub positioning problematic.

2 Axles ADR - Colaert Fixed axle series/Steering axle series

2.1 ADR - Colaert maintenance work summary table

Rigid and steering axle lubrication and maintenance table **Lubrication** **Maintenance**	**After the first 10 km of use at full load.**	**After the first 200 working hours or first 300 km travelled.**	**Every 500 working hours or every 8500 km travelled.1**	**Every 1500 working hours or every 25000 km travelled.1**	**Every 3000 working hours or every 50000 km travelled.[1]**
Lubrication with special **ADR Lithogrease 3** grease					
A – grease change in hub bearings					Lubrication
B – brake cam supports			Lubrication		
C – brake levers			Lubrication		
D – steering rod joints			Lubrication		
E – steering hinges			Lubrication		
Maintenance					
1 – Wheel nut torque check	Maintenance		Maintenance		
2 – brake gasket check			Maintenance		
3 – bearing gap check and any adjustments		Maintenance		Maintenance	
4 – brake lever stroke check and any adjustments			Maintenance		
5 – steering hinge gap check and any adjustments	Maintenance			Maintenance	
6 – shock absorber end screw torque check				Maintenance	
7 – steering control cylinder fastening screw torque check				Maintenance	
8 – steering rod end screw torque check and steering angle adjustment				Maintenance	
9 – brake cylinder support screw torque check				Maintenance	

[1] **For each instruction, increase check frequency in the event of heavy duty use.**

2.2 Rigid axle: Lubrication and maintenance point map

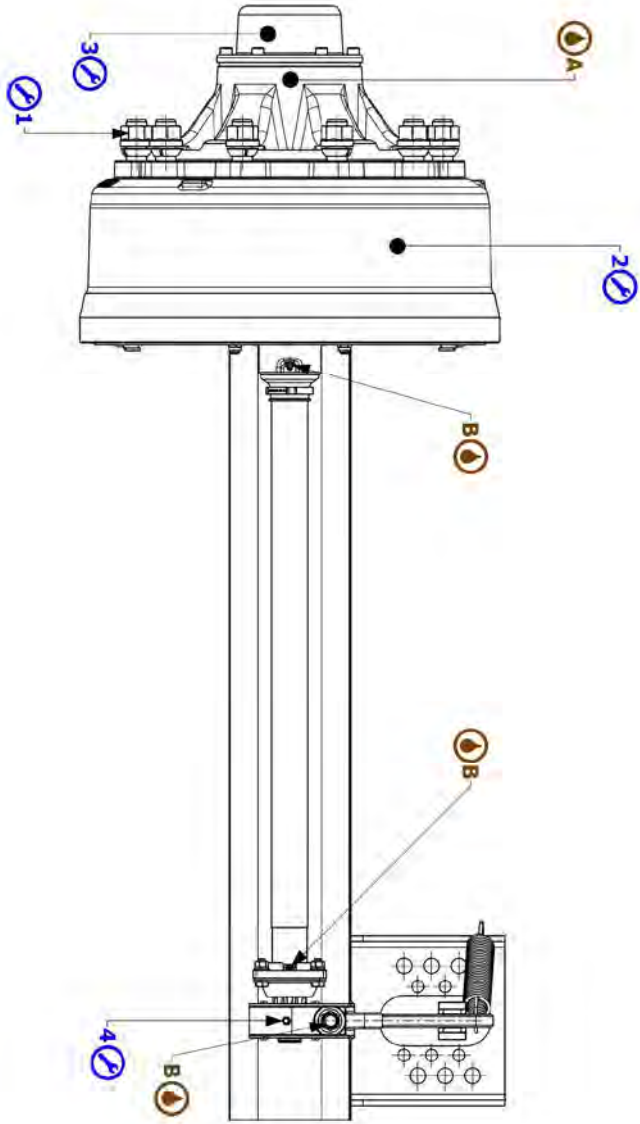

1. Wheel nut torque check.

After the first 10 km at full load, every wheel change and every 500 working hours (or every 8500 km travelled) and not over one year of use.
Tighten the wheel nuts as indicated in the table below, using a torque wrench. If a torque wrench is not available, use a pipe wrench with an extension. In the second to last column on the right of the table is the length of the lever corresponding to the required tightening torque, calculated for force F = approximately 60 kg.

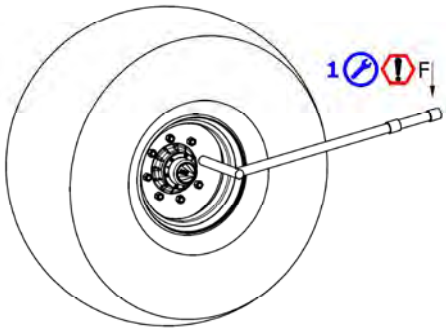

Torque instructions for burnished columns or lined with Dacromet

Wrench (mm)	Number of columns	tightening torque (kgm)	tightening torque (Nm)	lever (mm)	applied force (kg)
17	4 – M 12 x 1,5	9 min – 10 max	90 min – 100 max	450	20
19	5 – M 14 x 1,5	13 min – 15 max	130 min – 150 max	450	30
24	6 – M 18 x 1,5	27 min – 29 max	270 min – 290 max	450	60
27	8 – M 20 x 1,5	35 min – 38 max	350 min – 380 max	600	60
30	10 – M 22 x 1,5	45 min – 51 max	450 min – 510 max	800	60
36	10 – M 24 x 1,5	55 min – 61 max	550 min – 610 max	920	60

Torque instructions for galvanised columns

Wrench (mm)	Number of columns	tightening torque (kgm)	tightening torque (Nm)	lever (mm)	applied force (kg)
17	4 – M 12 x 1,5	9 min – 10 max	90 min – 100 max	450	20
19	5 – M 14 x 1,5	15 min – 17 max	130 min – 150 max	450	30
24	6 - M 18 x 1,5	30 min – 34 max	300 min – 340 max	500	60
27	8 – M 20 x 1,5	40 min – 44 max	400 min – 440 max	700	60
30	10 – M 22 x 1,5	50 min – 56 max	500 min – 560 max	900	60
36	10 – M 24 x 1,5	60 min – 66 max	600 min – 660 max	1050	60

2. Brake gasket check.

Every 500 working hours (or every 8500 km travelled).
Check brake friction gasket wear. Open both inspection windows on the back of the brake and check friction material thickness outside the reference line.

The reference line should always be well visible and, for vehicle safety, it is best to replace the brake friction gaskets when material thickness outside the line is reduced to 2mm. Always use original friction gaskets of the same type as those to be replaced.
Friction gasket features are indicated next to the gasket inside the reference line.

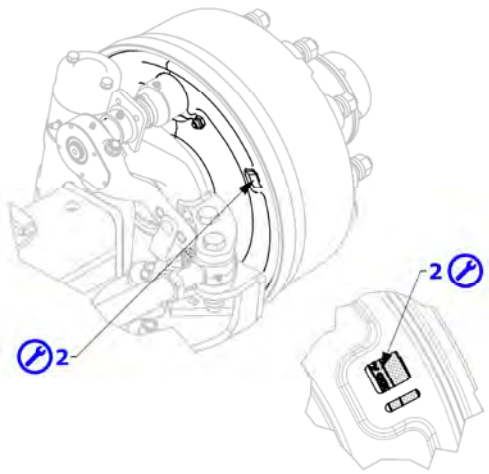

3. Bearing gap check
(version with press-in hub cap)

After the first 200 working hours at full load (or after the first 300 km travelled), afterwards every 1500 hours (or every 25000 km travelled).
Make sure the wheel bearings do not rock. This check is performed by lifting the axle with a jack until the wheel is off the ground and rotates freely. Insert a lever between the ground and tyre and force the wheel up to find any gaps.

Bearing gap adjustment
- remove the hub cap
- remove the elastic stop pin on the rack nut
- tighten the rack nut while simultaneously rotating the wheel until the hub is slightly braked
- rotate the rack nut until a slot with the hole on the spindle is found and insert the elastic pin. Make sure the hub rotates manually with slight resistance - top up **ADR Lithogrease 3** grease on the visible part of the bearing and reassemble the press-in hub cap.

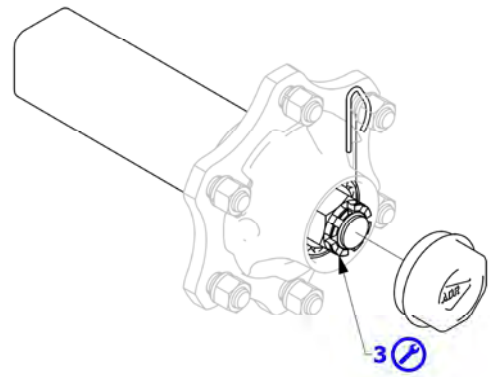

3. Bearing gap check
(Teknoax version with screw-in hub cap).

After the first 200 working hours at full load (or after the first 300 km travelled), afterwards every 1500 hours (or every 25000 km travelled).
Make sure the wheel bearings do not rock. This check is performed by lifting the axle with a jack until the wheel is off the ground and rotates freely. Insert a lever between the ground and tyre and force the wheel up to find any gaps.

Bearing gap adjustment

- remove the 3.6 hub cap and 3.5 gasket.
- remove the 3.4 stop screws and 3.3 rack.
- tighten the 3.2 rack nut while simultaneously rotating the wheel until the hub is slightly braked.
- reposition the 3.3 rack and secure it to the 3.2 rack nut with the 3.4 screws. Make sure the hub rotates manually with modest resistance.
- Top up **ADR Lithogrease 3** grease on the visual part of the bearing and reassemble the 3.6 hub cap being careful that its seal gasket is integral. If damaged, replace the gasket with an **ADR original spare part**.

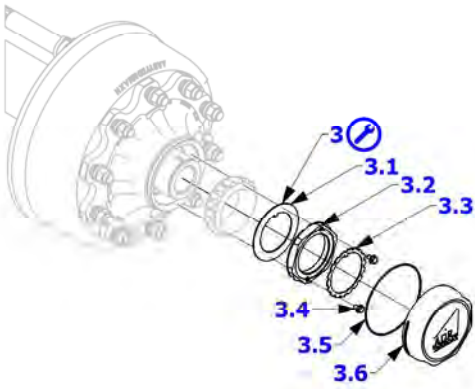

A. Grease change in hub bearings.

Every 3000 working hours (or every 50000km travelled).
As with the bearing gap check, lift the axle with a jack until the wheel rotates freely, then:

Flanged hub cap version	**Teknoax** version
1. remove the hub cap; 2. remove the elastic stop pin on the rack nut; 3. remove the rack nut;	1. remove the hub cap and gasket; 2. remove the stop screws and rack; 3. remove the threaded rack nut;

4. remove the hub complete with drum and bearings from the spindle;
5. perform this operation on one wheel at a time to avoid exchanges components between one wheel and the next. When simultaneously removing several wheel, mark the bearing cages to avoid incorrectly reassembling them;
6. clean the brake, check general conditions and wear. Replace any warn or damaged parts, eliminate any lubricant residue that could jeopardise good brake operations;
7. remove all used grease residue, clean the bearings and gaskets, replace damaged parts;
8. grease the conic housings and bearing rollers as indicated in the illustration, using **ADR Lithogrease 3** grease, the amount necessary for each bearing is about 150g;
9. reassemble all parts as indicated in the illustration with the help of bushings to avoid alignment errors that could damage bearings.
10. before reassembling the rack nut (flanged hub cap version) or threaded nut (Teknoax version), apply a layer of grease on the bearing, reassemble and adjust the nut as indicated in point **3-Bearing gap adjustment.**

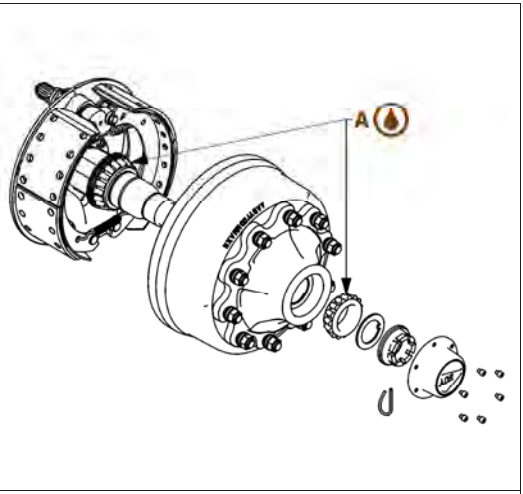

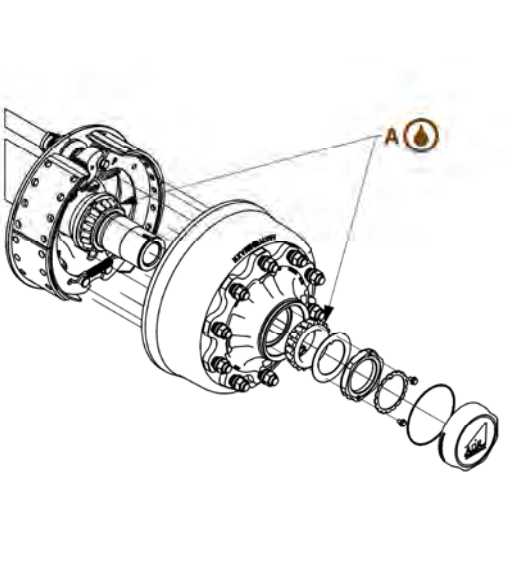

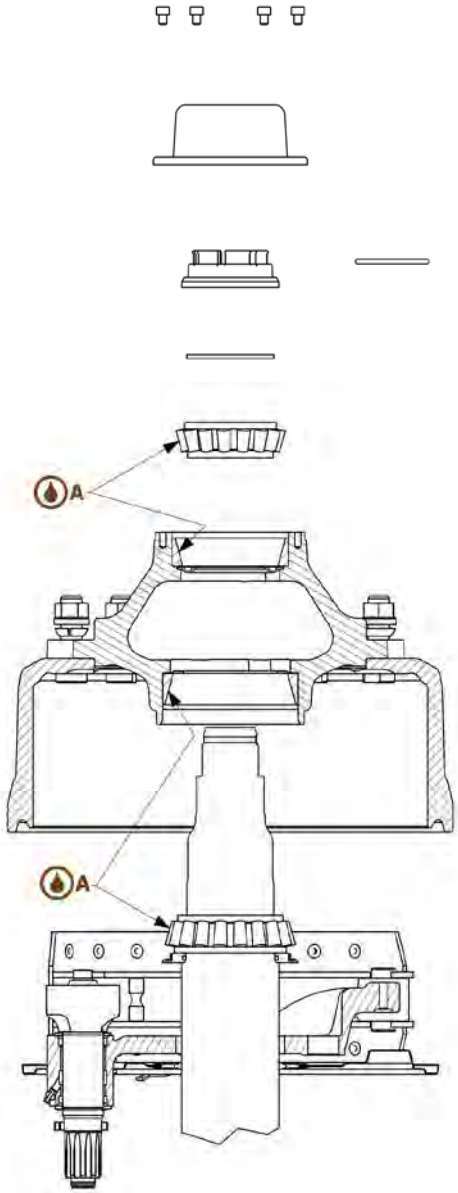
A
A

B. Brake cam support lubrication.

Every 500 working hours (or every 8500 km travelled) and before starting after a long period of disuse.
Lubricate the points indicated in the illustration with **ADR Lithogrease 3** grease. Lubricate the supports so that new grease leaks from the housings.

Grease and oil penetration in the brake is not admitted.
Repeat the operation even after each vehicle wash with high pressure equipment.

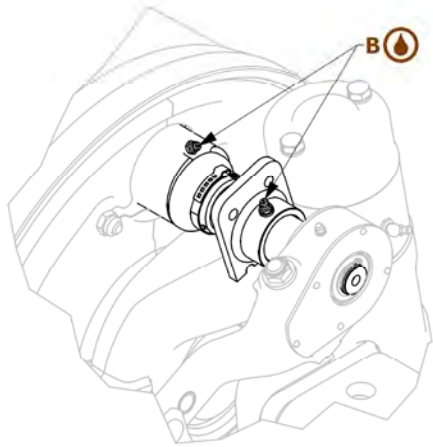

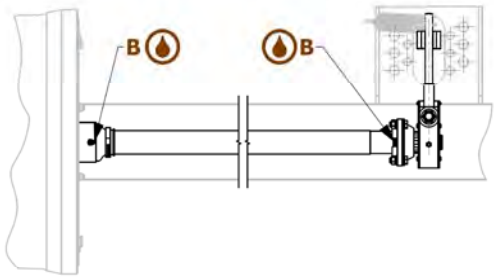

4. Brake lever stroke check and any adjustments

Every 500 working hours (or every 8500km travelled).
Make sure the brake cylinder rods do not exceed, with full brake,
40 mm - 45 mm.
Stroke must be adjusted using the register screw indicated in the illustration, rotating it with a wrench until it stops at the brake block contact with the drum. The register screw has a jack, thus from the end stroke position, loosen the register screw about 2 clicks and make sure the stroke corresponds to the instruction when adjusted.

C. Lubrication.

Every 500 working hours (or every 8500km travelled).
Lubricate the registration mechanism with **ADR Lithogrease 3** grease through the grease point indicated in the illustration.

Repeat the operation even after each vehicle wash with high pressure equipment.

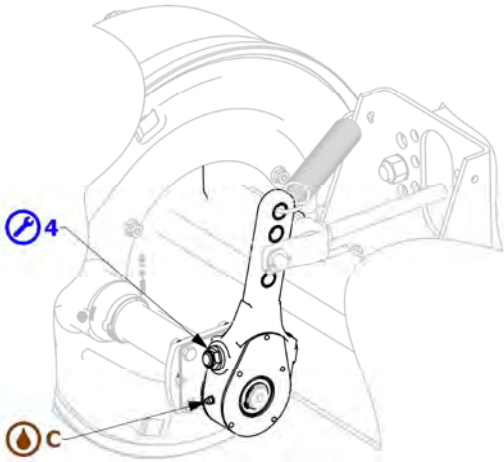

4126 Chassis Suspension

4 Tandem and Tridem ADR - COLAERT series K mechanical suspensions

4.1 Tandem and Tridem Series KB and series KE

4.1.1 KB/KE series suspension maintenance work summary table

Tandem and Tridem mechanical suspension lubrication and maintenance table **Lubrication** **Maintenance**	**After the first 10 km of use at full load.**	**After the first 500 working hours or first 8500 km travelled.**	**Every 500 working hours or every 8500 km travelled.**[1]	**Every 1500 working hours or every 25000 km travelled.**[1]
Lubrication with adhesive grease, water repellent and E.P. additive				
A – moderately grease the ends of the leaf springs and relevant sliding housings in the suspension frame (fixed supports and rocker arm)	✓		✓	
Maintenance				
0 – visual inspection of the integrity of all components.		✓		✓
1 – axle anchoring to leaf spring: check correct housing. Check torque with torque wrench	✓	✓		✓
2 – threaded pin torque check on rocker arm support.				✓
3 – threaded pin torque check on axle reaction rods.	✓			✓
4 – end terminal screw torque check on axle reaction rods.				✓
5 – non-slip screw torque check on leaf springs	✓			✓

[1] **For each instruction, increase check frequency in the event of heavy duty use.**

4126 Chassis Suspension

4.1.2 Tandem and Tridem Series KB and series KE layout

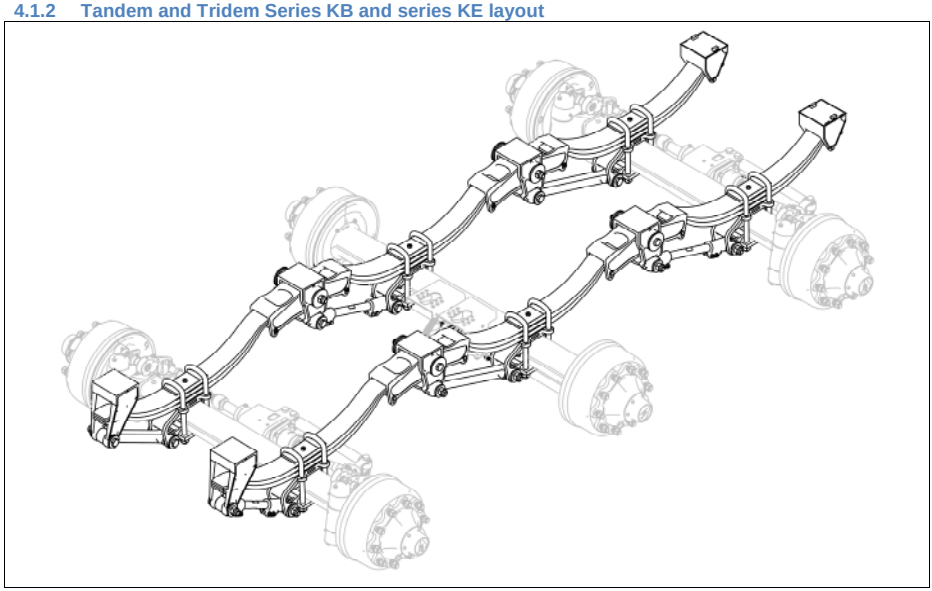

4.1.3 Lubrication and maintenance map

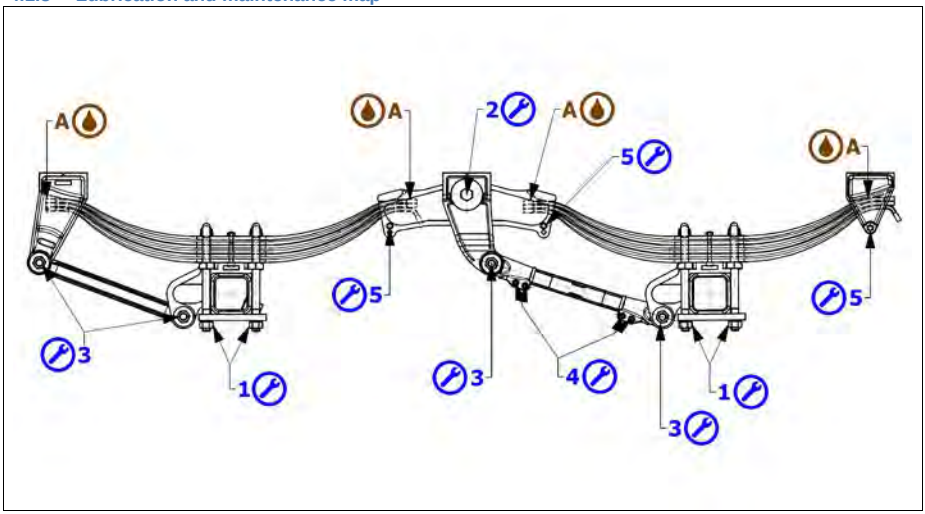

4126 Chassis Suspension

1 - Axle anchoring to leaf spring.

After the first 10 km at full load, after the first 500 working hours (or after the first 8500 km travelled), afterwards every 1500 working hours (or every 25000 km travelled).
Check correct axle anchor housing to the suspension leaf springs and make sure they are correctly tightened.
Check torque with a torque wrench according to the diagonals of each anchor indicated in the illustration.

For torque instructions, refer to the table below.

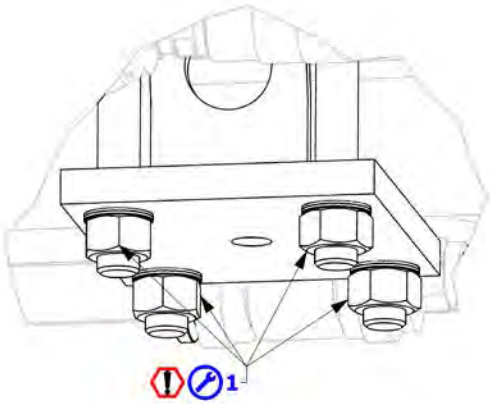

Part torque instructions

U bolt	wrench	tightening torque (kgm)	tightening torque (Nm)
Ø 18	27	23 min / 27 max	230 min / 270 max
Ø 22	34	45 min / 50 max	450 min / 500 max
Ø 24	36	55 min / 60 max	550 min / 600 max
Ø 27	41	60 min / 72 max	600 min / 720 max
Ø 30	46	90 min / 100 max	900 min / 1000 max

4126 Chassis Suspension

2 – Threaded pin torque check on rocker arm support.

Every 1500 working hours (or every 25000 km travelled).
Check threaded pin torque using the torque wrench and referring to the tightening torque indicated in the table below.

A minimum gap of about 4mm should remain visible between the threaded pin head and rocker arm support with this torque value. Should the gap be small or null, replace the joint silent blocks.

Contact **ADR - Colaert customer service** to replace the silent blocks.

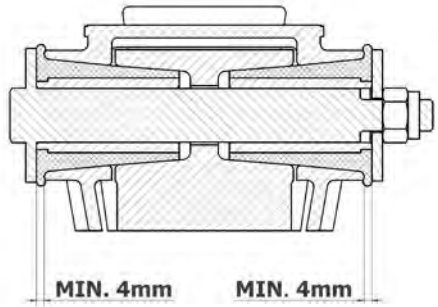

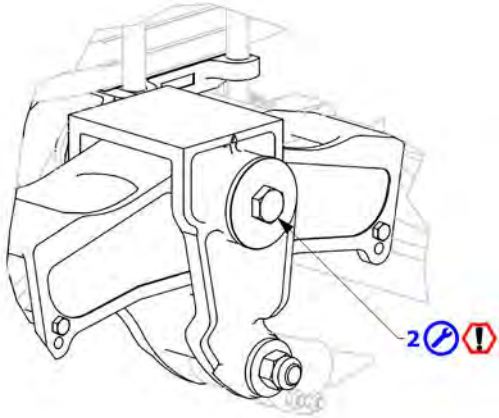

Part torque instructions

id	screw	wrench	Number of pins to be tightened		tightening torque (kgm)	tightening torque (Nm)
			Tandem	Tridem		
2	M 24	36	2	4	27 min / 30 max	270 min / 300 max

4126 Chassis Suspension

3 – Threaded pin torque check on axle reaction rods

After the first 10 km at full load, afterwards every 1500 working hours (or every 25000 km travelled).
Check threaded pin torque on reaction rod ends using the torque wrench and referring to the table at the bottom of the page for tightening torque.

The threaded pin head should remain visible with this torque value. The threaded pin should not be in contact with the support, otherwise the joint silent blocks must be replaced.

Contact **ADR - Colaert customer service** to replace the silent blocks.

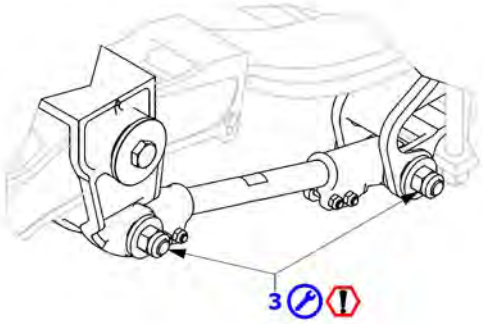

4 – End terminal screw torque check on axle reaction rods

Every 1500 working hours (or every 25000 km travelled).
Check sleeve bolt torque on variable length reaction rod ends using the torque wrench and referring to the tightening torque indicated in the table at the bottom of the page.

Insufficient sleeve torque can alter rod regulation and axle alignment.

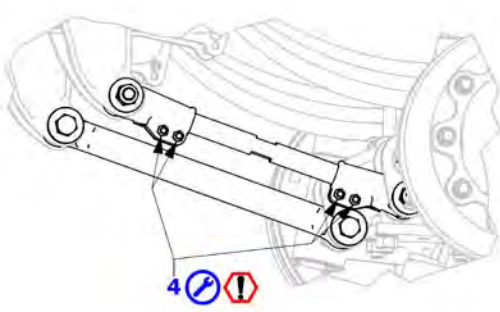

Part torque instructions

id	screw	wrench	tightening torque (kgm)	tightening torque (Nm)
3	M 24	36	10 min / 12 max	100 min / 120 max
4	M 12	19	8 min / 10 max	80 min / 100 max

4126 Chassis Suspension

5 – non-slip screw torque check on leaf springs

After the first 10 km at full load, afterwards every 1500 working hours (or every 25000 km travelled).
Visually check leaf spring non-slip screws. Make sure the nuts are tightened and the screws do not rock in their housings. If the screws are damaged, only replace them after having checked the cause of the damage.

In the event of damages, contact **ADR - Colaert customer service.**

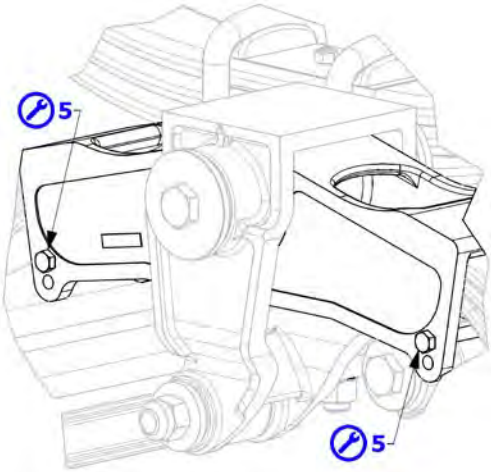

A – Leaf spring end runners

First 10 km at full load, afterwards every 500 working hours (or every 8500 km travelled).
Moderately grease the ends of the leaf springs and relevant sliding housings in the suspension frame (fixed supports and rocker arm) Use grease that has adhesive characteristics, water repellent and with E.P. additive, spreading it on all surfaces with a brush.

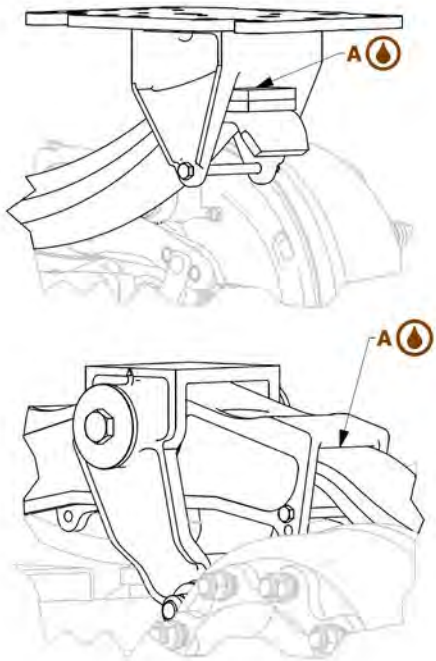

4130 Chassis Suspension

4.3 Tandem and Tridem Series KW

4.3.1 KW series suspension maintenance work summary table

Tandem and Tridem mechanical suspension lubrication and maintenance table **Lubrication** **Maintenance**	**After the first 10 km of use at full load.**	**After the first 500 working hours or first 8500 km travelled.**	**Every 500 working hours or every 8500 km travelled.[1]**	**Every 1500 working hours or every 25000 km travelled.[1]**
Lubrication with adhesive grease, water repellent and E.P. additive				
A – moderately grease the ends of the leaf springs and relevant sliding housings in the suspension frame (fixed supports and rocker arm)	Lubrication		Lubrication	
Maintenance				
0 – visual inspection of the integrity of all components.		Maintenance		Maintenance
1 – Axle anchoring to leaf spring: check correct housing. Check torque with torque wrench	Maintenance	Maintenance		Maintenance
2 – Check central suspension support torque.				Maintenance
3 – Threaded pin torque check on axle reaction rods.	Maintenance			Maintenance
4 – End terminal screw torque check on axle reaction rods.				Maintenance
5 – non-slip screw torque check on leaf springs	Maintenance			Maintenance

[1] **For each instruction, increase check frequency in the event of heavy duty use.**

4130 Chassis Suspension

4.3.2 KW tandem and tridem layout

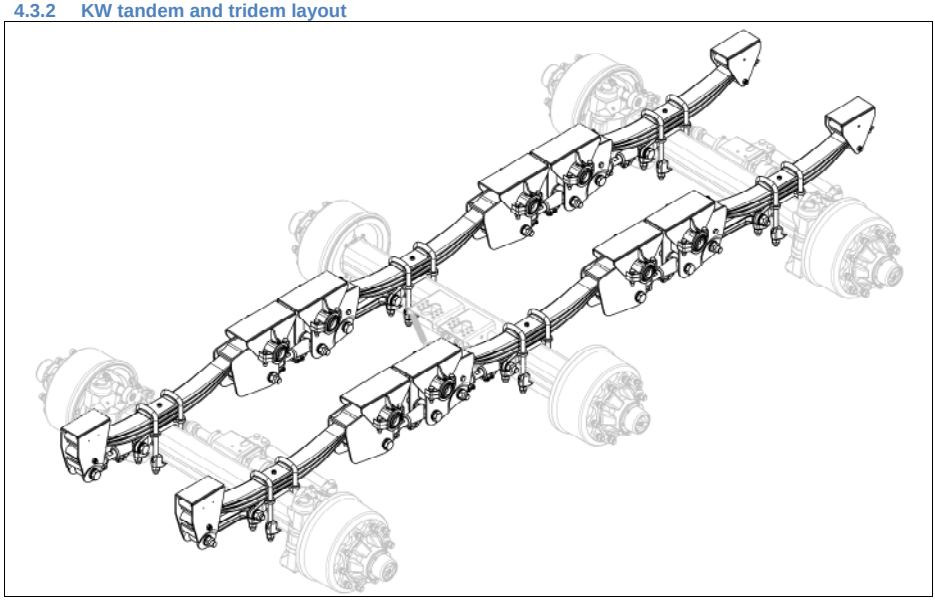

4.3.3 Lubrication and maintenance map

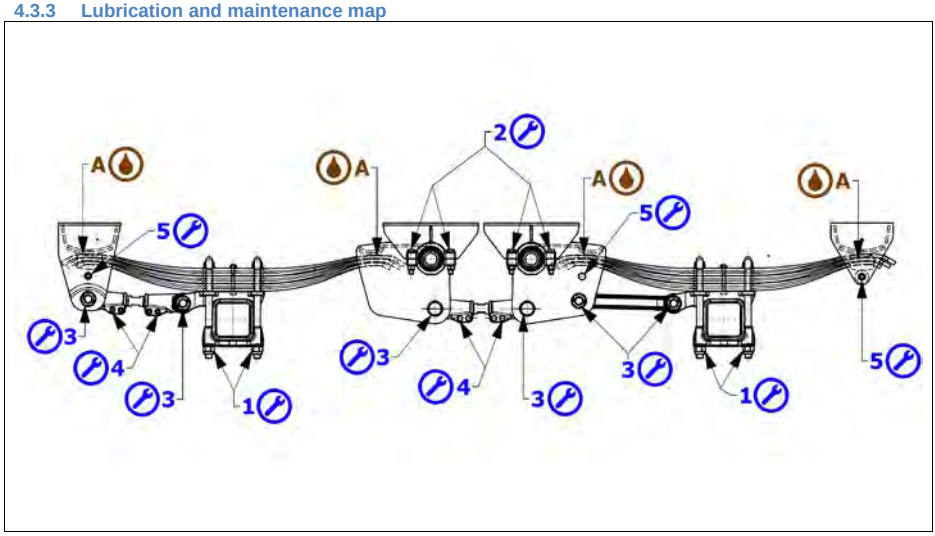

4130 Chassis Suspension

1 – Axle anchoring to leaf spring: check correct housing.

After the first 10 km at full load, after the first 500 working hours (or after the first 8500 km travelled), afterwards every 1500 working hours (or every 25000 km travelled).
Check correct axle anchor housing to the suspension leaf springs and make sure they are correctly tightened.
Check torque with a torque wrench according to the diagonals of each anchor indicated in the illustration.

For torque instructions, refer to the table below.

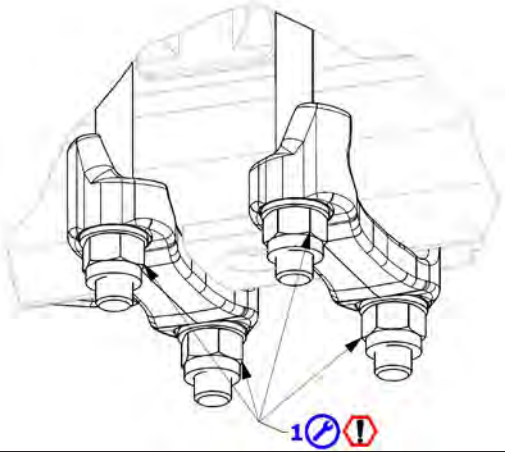

Part torque instructions

U bolt	wrench	Number of parts to be tightened		tightening torque (kgm)	tightening torque (Nm)
		Tandem	Tridem		
Ø 18	27	16	24	23 min / 27 max	230 min / 270 max
Ø 22	34			45 min / 54 max	450 min / 540 max
Ø 24	36			50 min / 60 max	500 min / 600 max
Ø 27	41			60 min / 72 max	600 min / 720 max
Ø 30	46			90 min / 100 max	900 min / 1000 max

2 – Check central suspension support torque.

Every 1500 working hours (or every 25000 km travelled).
Check bolt torque in silent block housings using the torque wrench and following the instructions in the table below.

This torque value must produce a visible compression of the silent block rubber. Should this not occur, replace the joint silent blocks.

Contact **ADR - Colaert customer service** to replace the silent blocks.

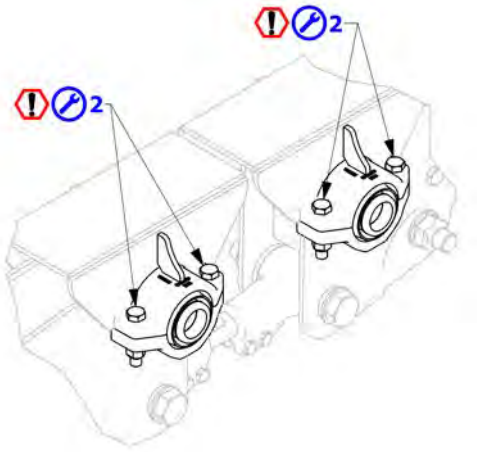

4130 Chassis Suspension

3 – Threaded pin torque check on axle reaction rods

After the first 10 km at full load, afterwards every 1500 working hours (or every 25000 km travelled).
Check threaded pin torque on axle reaction rod ends using the torque wrench following the instructions below.

The threaded pin head should remain visible and not in contact with the support with this torque value, otherwise the joint silent blocks must be replaced.

Contact **ADR - Colaert customer service** to replace the silent blocks.

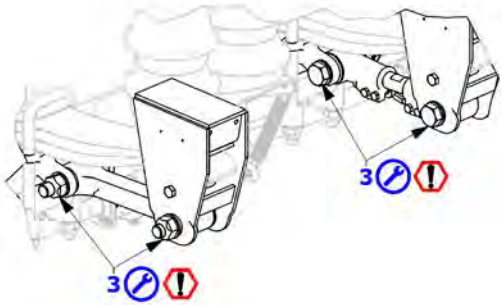

Part torque instructions

id	screw	wrench	Number of parts to be tightened		tightening torque (kgm)	tightening torque (Nm)
			Tandem	Tridem		
2	M 16	24	16	32	17 min / 20 max	170 min / 200 max
3	M 30	46	12	20	70 min / 80 max	700 min / 800 max

4130 Chassis Suspension

4 – End terminal screw torque check on axle reaction rods

Every 1500 working hours (or every 25000 km travelled).
Check sleeve bolt torque on variable length reaction rod ends using the torque wrench, M12 screws, 19 wrench, 8 - 10 daNm tightening torque.

Insufficient sleeve torque can alter rod regulation and axle alignment.

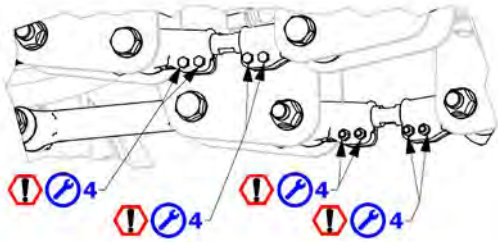

5 – Leaf spring non-slip screw torque check.

After the first 10 km at full load, afterwards every 1500 working hours (or every 25000 km travelled).
Visually check leaf spring non-slip screws. Make sure the nuts are tightened and the screws do not rock in their housings. If the screws are damaged, only replace them after having checked the cause of the damage.

In the event of damages, contact **ADR - Colaert customer service.**

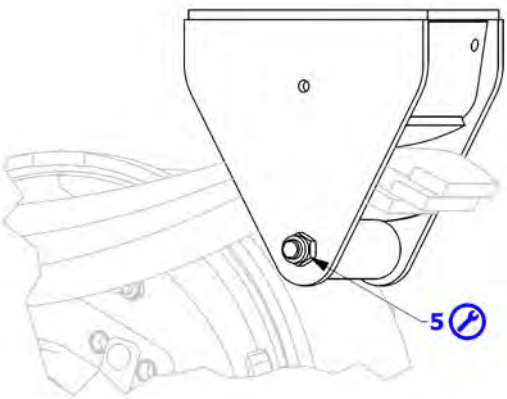

Part torque instructions

id	screw	wrench	Number of parts to be tightened		tightening torque (kgm)	tightening torque (Nm)
			Tandem	Tridem		
4	M 12	19	16	32	8 min / 10 max	80 min / 100 max

4130 Chassis Suspension

A – Leaf spring end runners

After the first 10 km at full load, afterwards every 500 working hours (or every 8500 km travelled).
Moderately grease the ends of the leaf springs and relevant sliding housings in the suspension frame (fixed supports and rocker arm) Use grease that has adhesive characteristics, water repellent and with E.P. additive, spreading it on all surfaces with a brush.

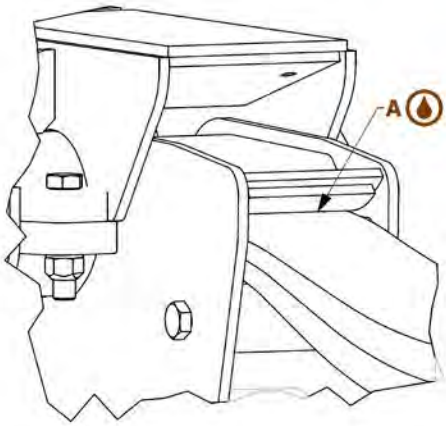

OPTIONS

HYDRAULIC BRAKES

The Chassis features a Hydraulic Brake Option. By plugging the 1/4” quick coupler from the Chassis into the quick coupler/accessory tractor port, the brakes on the Chassis are activated when the user pushes the brake pedal. The braking force can be adjusted. See the ADR Axle Section of this manual for braking adjustment instructions.

DECAL LOCATION

Your H&S Chassis was manufactured with operator safety in mind. Located on the chassis are various decals to aid in operation, and warn of danger or caution areas. Pay close attention to all the decals on your chassis.

DO NOT REMOVE ANY TO THESE DECALS. IF DECALS ARE LOST, DAMAGED, OR IF CHASSIS IS REPAINTED, REPLACE DECALS. REMEMBER: DECALS ARE FOR YOUR PROTECTION AND SAFETY.

Listed below are the decals for the Chassis.

Part #	Qty	Description
311	1	Patent Decal
1495A	1	Run-Away/Break-Away Hazard
54033	1	Made in the U.S.A.
71188B	1	Jack Storage Position
72203A	1	Warning - Help Avoid Injury
72859	1	H&S Chassis Right Side
72861	1	H&S Chassis Left Side
82602	2	Crushing Hazard (One on each side of Tongue)
84044	1	FEMA Decal
84045	1	H&S - Since 1967
84461	2	4130 Model #
84462	2	4126 Model #
91604	1	Warning-To Prevent Serious Injury or Death

DECAL LOCATION

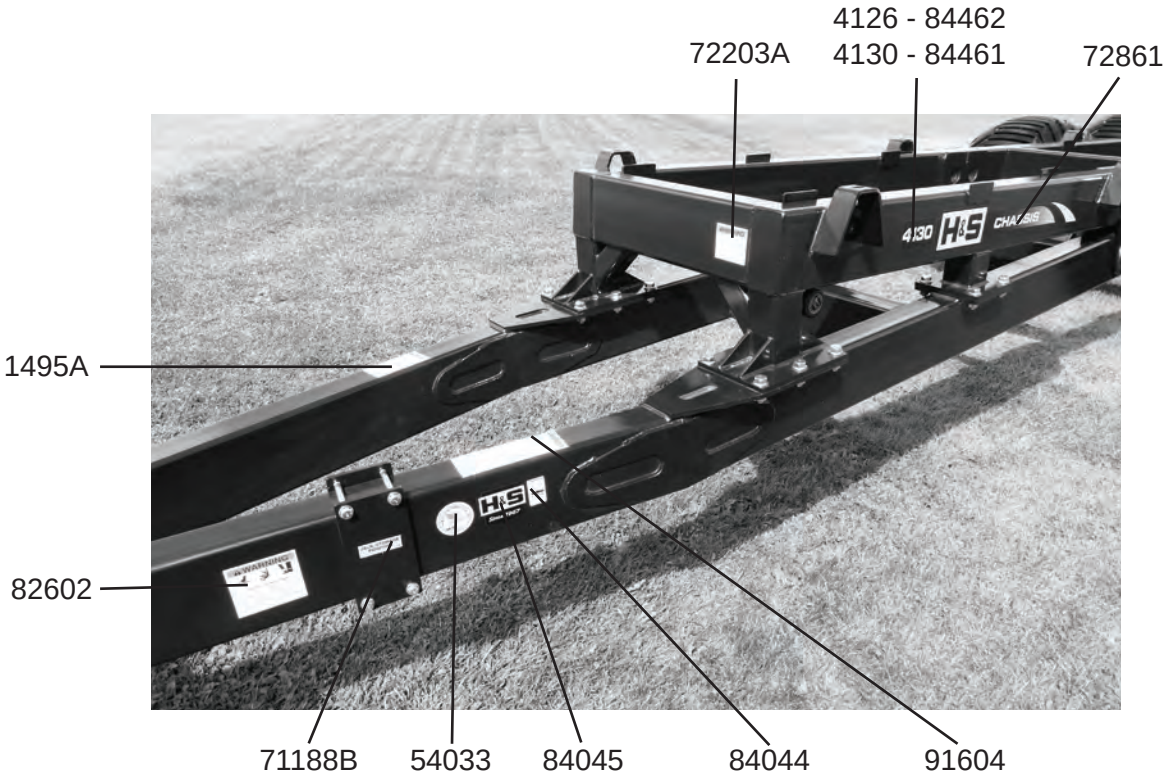

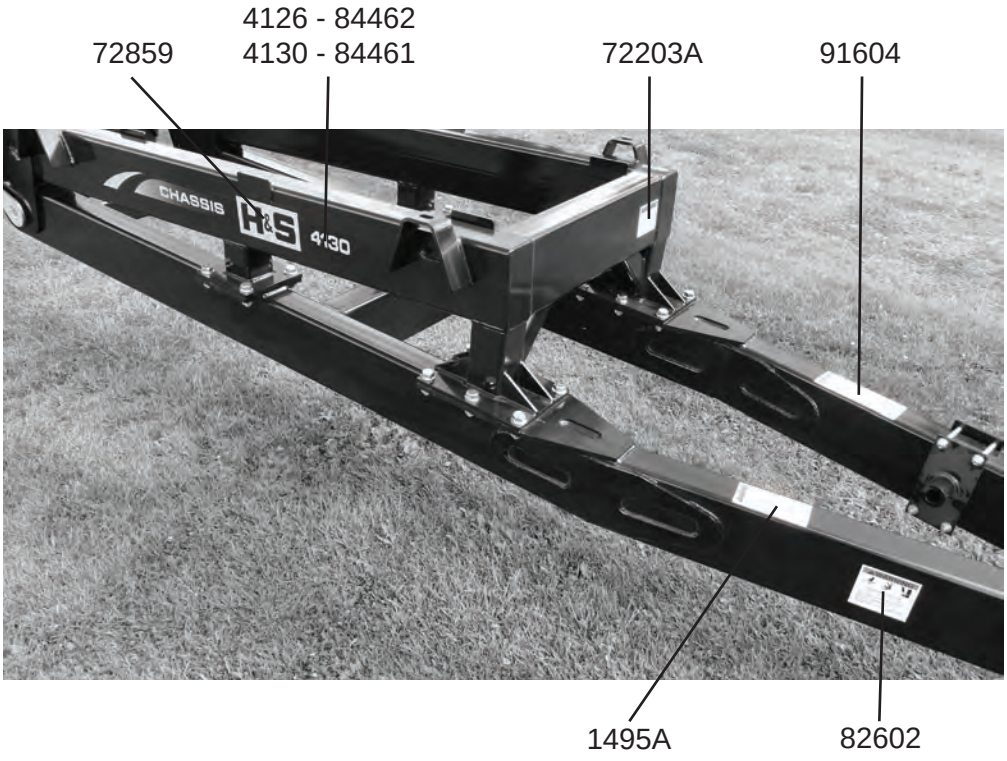

SERVICE NOTES

H&S
Manufacturing Co. Inc.

Products approved for the FEMA SEAL OF QUALITY

SEAL OF QUALITY
FEMA
FARM EQUIPMENT MANUFACTURERS ASSOCIATION